art. **21039.00.00**
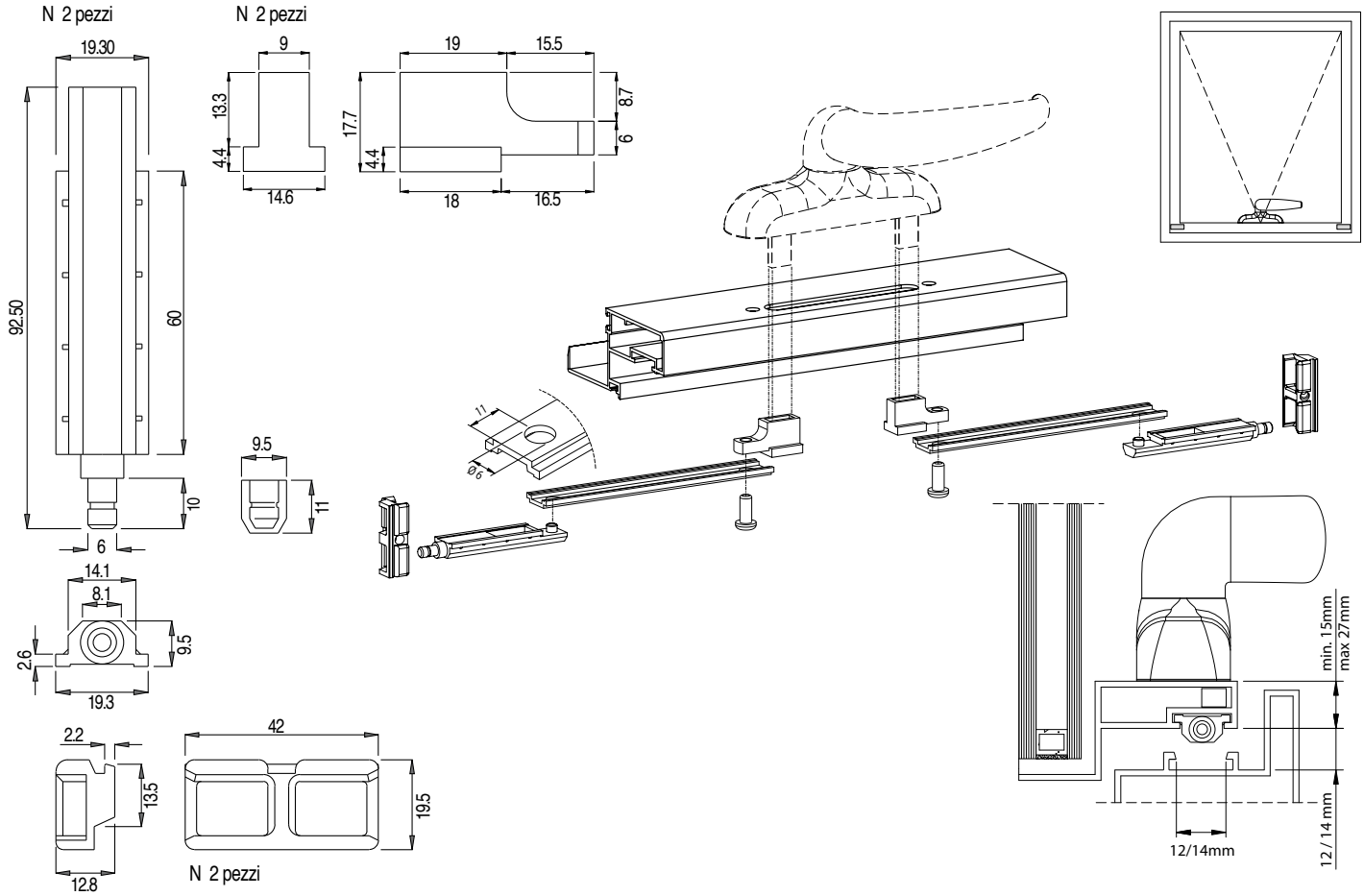
- 20 pezzi
- 20 units