art.08220.00.00 - 4 pezzi / 4 units

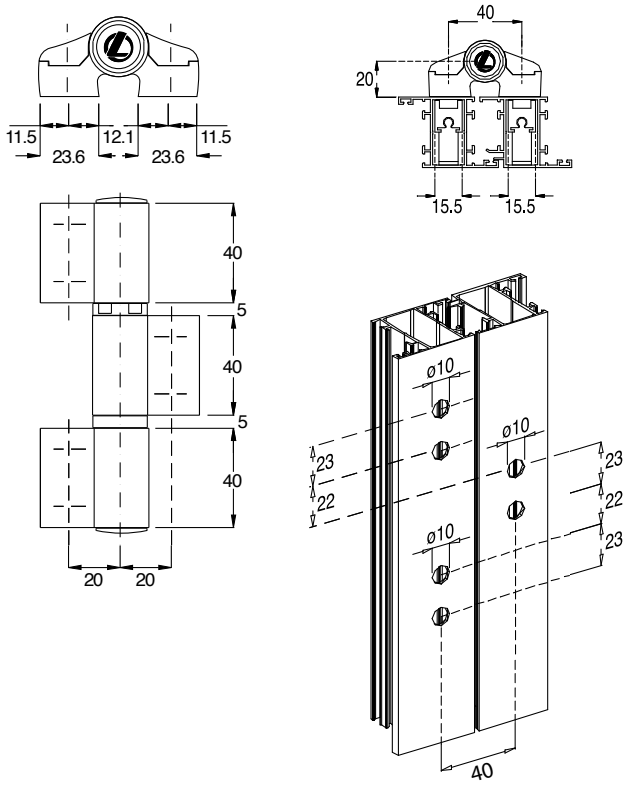

art.08230.00.00 - 4 pezzi / 4 units

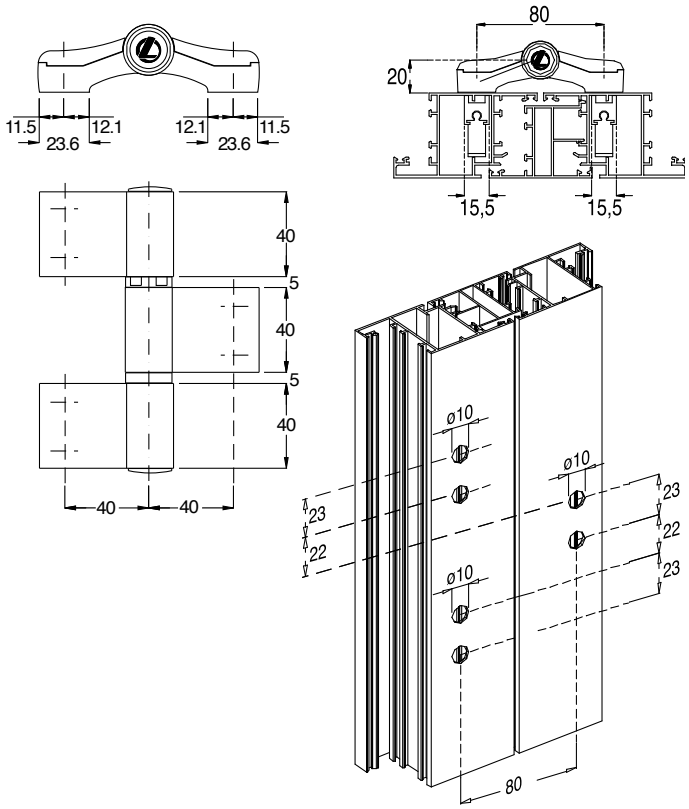

art.08240.00.00 - 4 pezzi / 4 units

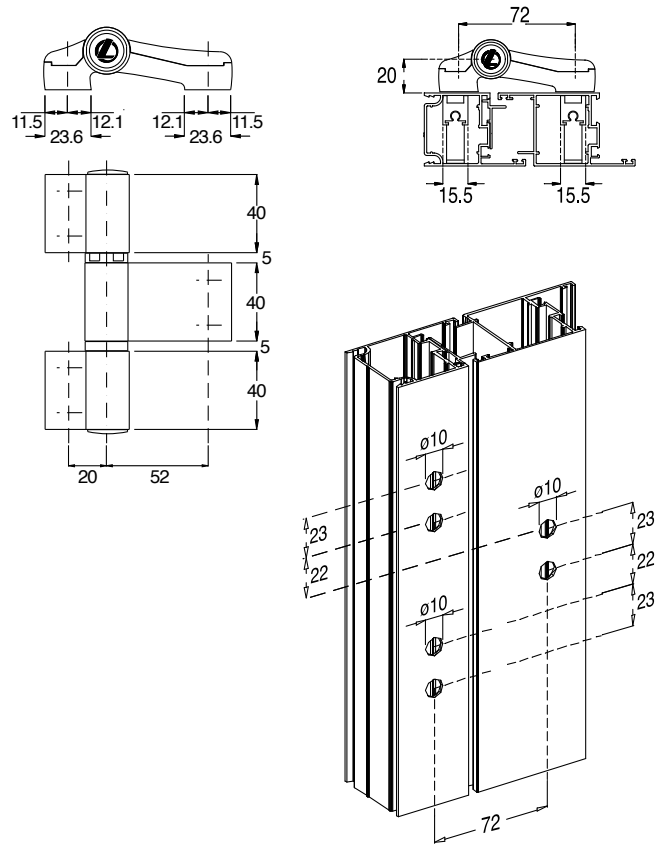
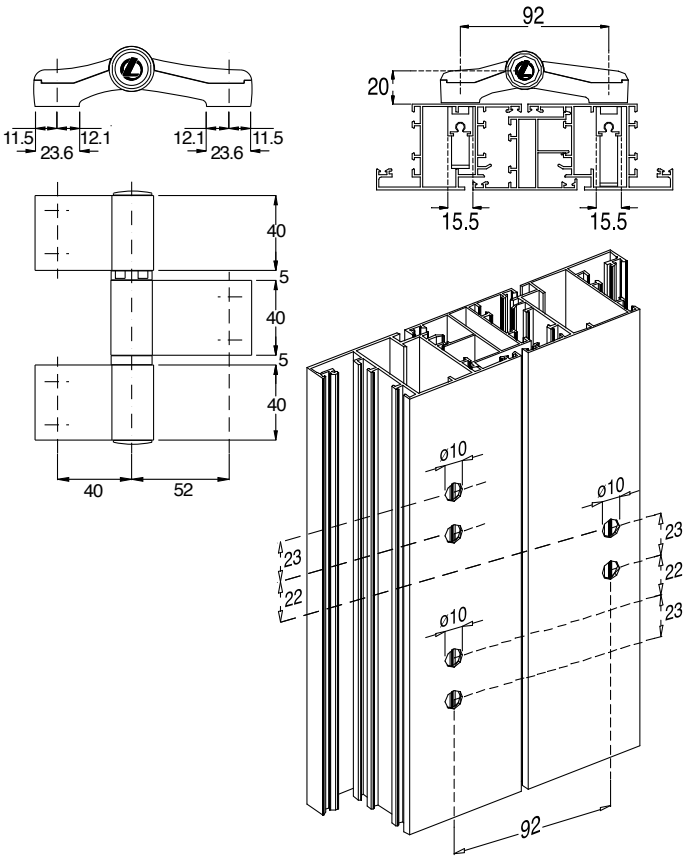
art.08250.00.00 - 4 pezzi / 4 units